INSTALLATION INSTRUCTIONS:

ATTENTION:
1.0 TOP OF BASE PLATES MUST BE LEVEL WITHIN $\frac{1}{8}$ AND ON A COMMON PLANE WITHIN $\frac{1}{4}$ INCH.
IF TOP OF BASE PLATE/CONCRETE CAN NOT BE MAINTAINED ON THE SAME PLANE WITHIN $\frac{1}{4}$ INCH OR CONCRETE MUST BE SLOPED FOR DRAINAGE, THE PIT MUST BE DEEPENED TO ACCOMMODATE GROUTING.

2.0 BASE PLATE INSTALLATION BEFORE PLATFORMS ARE SET:

2.1 LAYOUT BASE PLATE CENTER LINES AS SHOWN ON FOUNDATION DRAWING BY MARKING TOP OF CONCRETE SLAB WITH CHALK LINE. PLACE CONCRETE NAILS AT CHALK LINE INTERSECTIONS TO ESTABLISH CENTER OF LOAD CELLS. LAY DOWN BASE PLATES WITH $\frac{3}{8}$ HOLE CENTERED OVER CONCRETE NAIL. TRANSFER DRILL (2) BASE PLATE MOUNTING HOLES DIAGONALLY AT EACH BASE PLATE AS PER ANCHOR BOLT MANUFACTURERS SPECIFICATION.
INSTALL ANCHOR BOLTS.

2.2 SET LOAD CELLS ONTO BASE PLATES.

2.3 LAYOUT 7 INCH HIGH WOODEN BLOCKS, OR JACKS AS SHOWN IN VIEW "A" AND SET PLATFORMS IN SEQUENCE START, CENTER, END ONTO 7 INCH WOODEN BLOCKS.

2.4 PLACE JACKS AND LOWER PLATFORM ONTO LOAD CELLS.

3.0 ALTERNATE BASE PLATE INSTALLATION AFTER PLATFORMS ARE SET:

3.1 PLACE BASE PLATES IN APPROX. AREA OF LOAD CELL.

3.2 LAYOUT 7 INCH HIGH WOODEN BLOCKS, OR JACKS AS SHOWN AND SET PLATFORMS IN SEQUENCE START, CENTER, END ONTO 7 INCH WOODEN BLOCKS.

3.3 LOCK SCALE PLAFORMS IN PLACE BY JAMMING BUMPER BOLT AGAINST STRIKER PLATE.

3.4 TO ASSURE ALIGNMENT OF LOAD CELL CENTERING RING TO LOAD CELL BODY, THE FOLLOWING PROCEDURE SHOULD BE FOLLOWED: CENTER LOAD CELL ON BASE PLATE WITH RESPECT TO CLAMP HOLD DOWN HOLES. CLAMP CELL IN POSITION USING CLAMPS, BOLTS AND WASHERS PROVIDED. LOWER SCALE PLATFORM ONTO LOAD CELL. VERIFY ALIGNMENT BY USING ALIGNMENT GAGE.
IF NECESSARY, UNLOAD PLATFORM AND RELOCATE LOAD CELL AND BASEPLATE TOGETHER.

3.5 TRANSFER DRILL (2) BASE PLATE MOUNTING HOLES DIAGONALLY AT EACH PLATE AND INSTALL ANCHOR BOLTS AS PER MANUFACTURERS SPECIFICATION (USE 24" LONG DRILL BIT).

3.6 VERIFY ALIGNMENT BY USING ALIGNMENT GAGE.
IF REQUIRED, LOOSEN CLAMP BOLTS AND RE-ALIGN LOAD CELL BODY WITH RESPECT TO CENTERING RING.

3.7 INSTALL LOAD CELL WITH FITTINGS ACCESSIBLE TO FACILITATE TUBING AND PURGING.

ITEM NO.	DESCRIPTION	QTY	MATERIAL	UNIT WT.	PART NO.	SIZE	WT.
1	BLOCK	A/R	WOOD		7 X 7 X 7	QUANTITY PER LOAD CELL	
2	ALIGNMENT GAGE, HEAD	1	ALUM		B-30305-1		
3	SIDE BUMPER	4	CS		0.38 X 2.00 X 2.00		
4	SIDE BUMPER	4	CS		1.00 X 2.00 X 2.00		

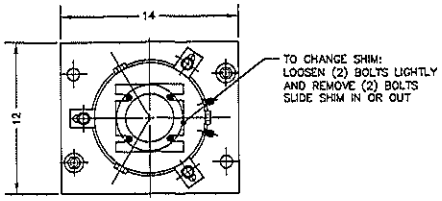

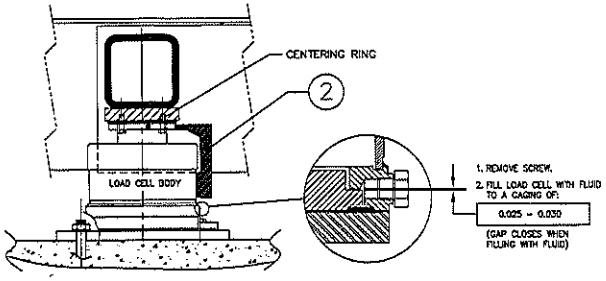

SIDE BUMPER CONFIGURATION AS REQUIRED

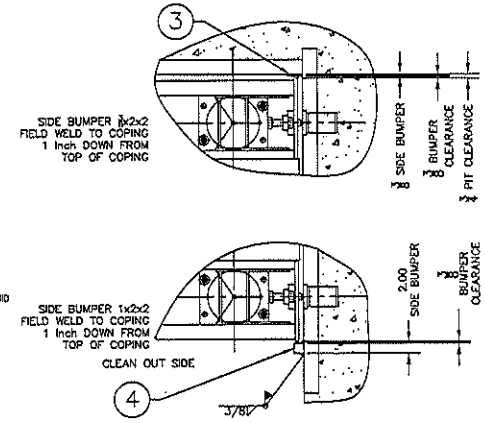

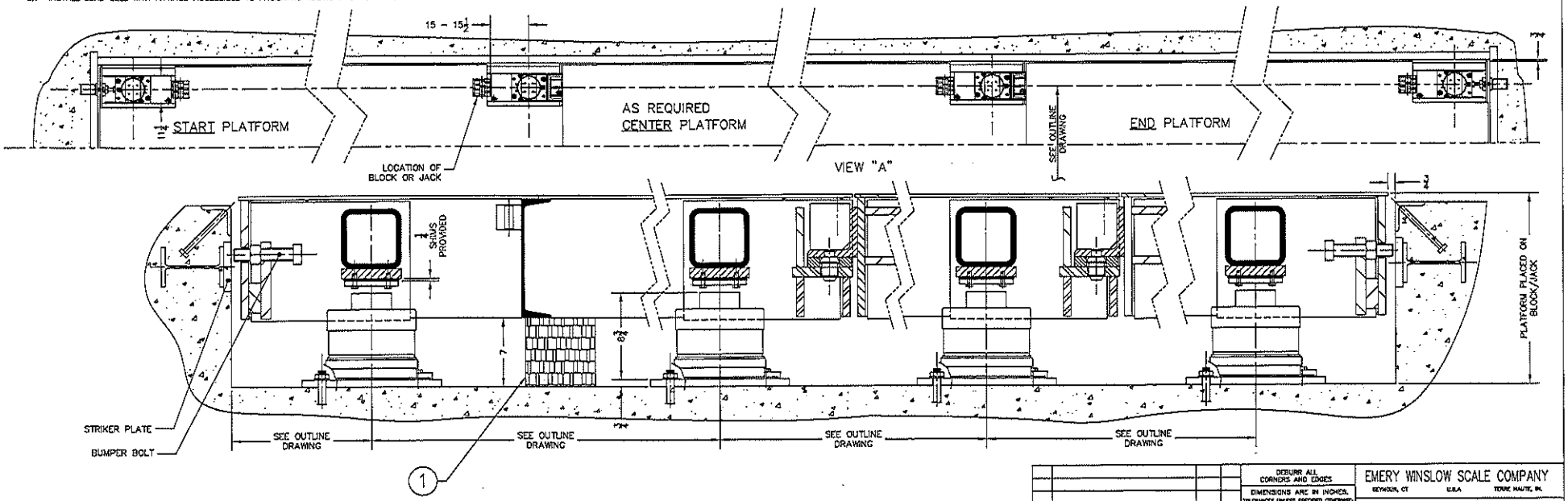

REV	DESCRIPTION	DATE	BY
D	Revised		OT

THIS DRAWING IS THE PROPERTY OF EMERY WINSLOW SCALE COMPANY SEYMOUR, CONNECTICUT. THE INFORMATION CONTAINED HEREON IS CONFIDENTIAL AND IS NOT TO BE USED OR DISSEMINATED TO OTHERS WITHOUT THE EXPRESS WRITTEN CONSENT OF EMERY WINSLOW SCALE COMPANY.

DEBURR ALL CORNERS AND EDGES
DIMENSIONS ARE IN INCHES.
TOLERANCES UNLESS SPECIFIED OTHERWISE:
MACHINING: .XX = ± .01, .XXX = ± .005
FABRICATION: ± .13

DRAWN: OT DATE: 06-07-05
CHECKED: DATE:
ACAD FILENAME: AC01220
LAYERS USED: ALL

EMERY WINSLOW SCALE COMPANY
SEYMOUR, CT U.S.A. TERRE HAUTE, IN.

SERIES 80-ALL SIZES-TA
INSTALLATION INSTRUCTIONS

SCALE	FIRST USED ON	DRAWING NO.	REV
N/A		D-36118	D